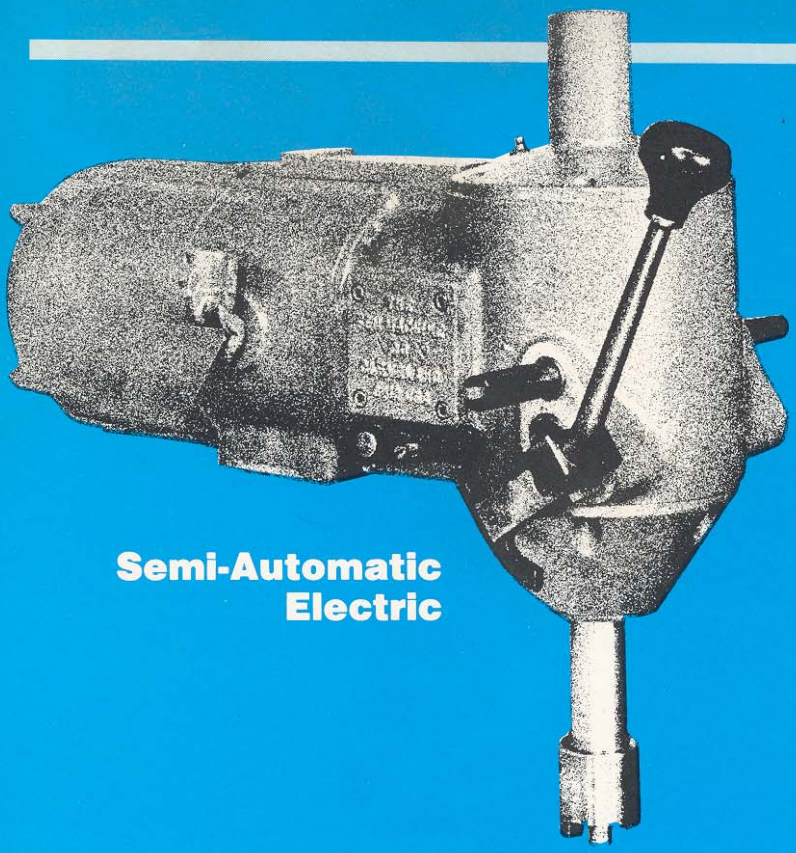

Semi-Automatic Electric

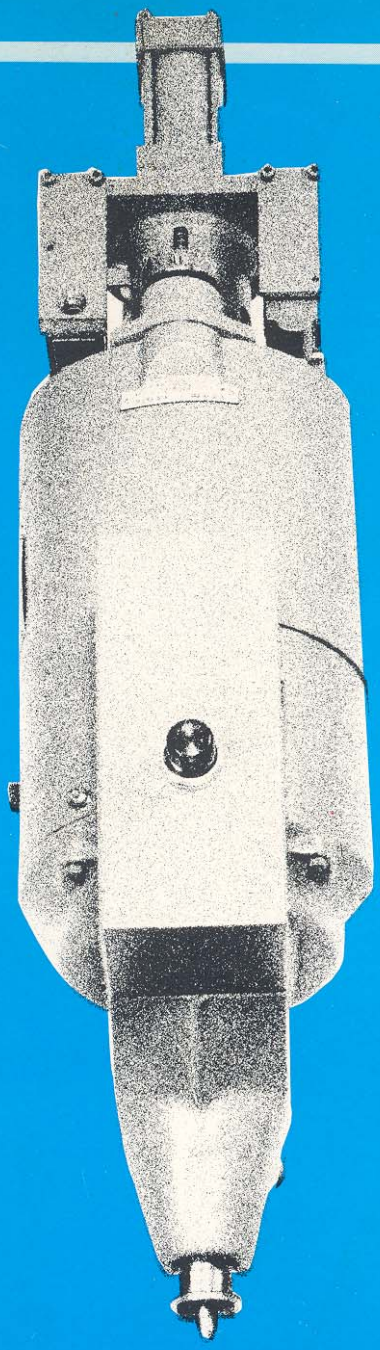

Automatic Electric

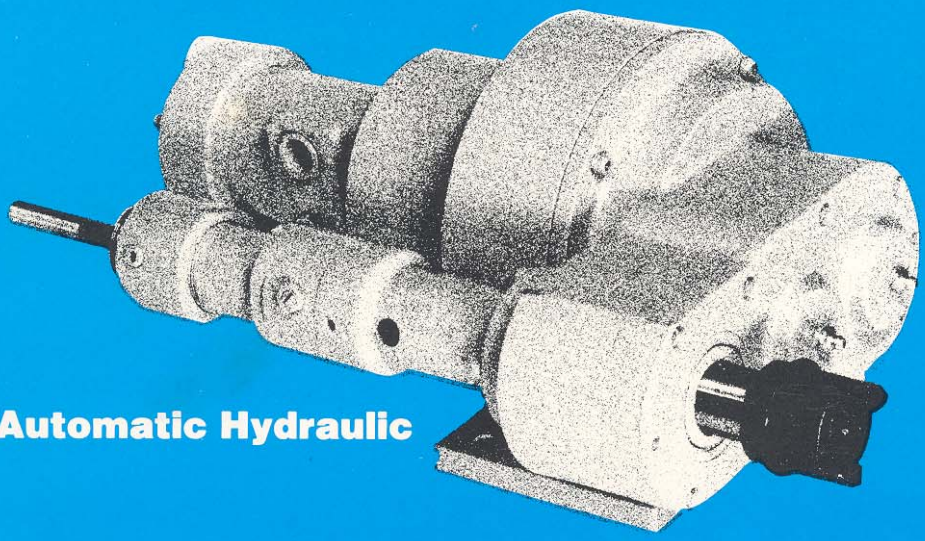

Automatic Hydraulic

Controlled Automatic Variable Torque Wrenches

Production and Job Shops Automatic Machinery and Original Equipment Manufacturers

FEN POWER WRENCHES

KIRALY TOOL AND DIE, INC.

1250 CRESCENT STREET
YOUNGSTOWN, OH 44502

PH: 330-744-5773
FAX 330-744-5753

WWW.KIRALYTOOL.COM
Email: eng@kiralytool.com

FEN POWER WRENCHES

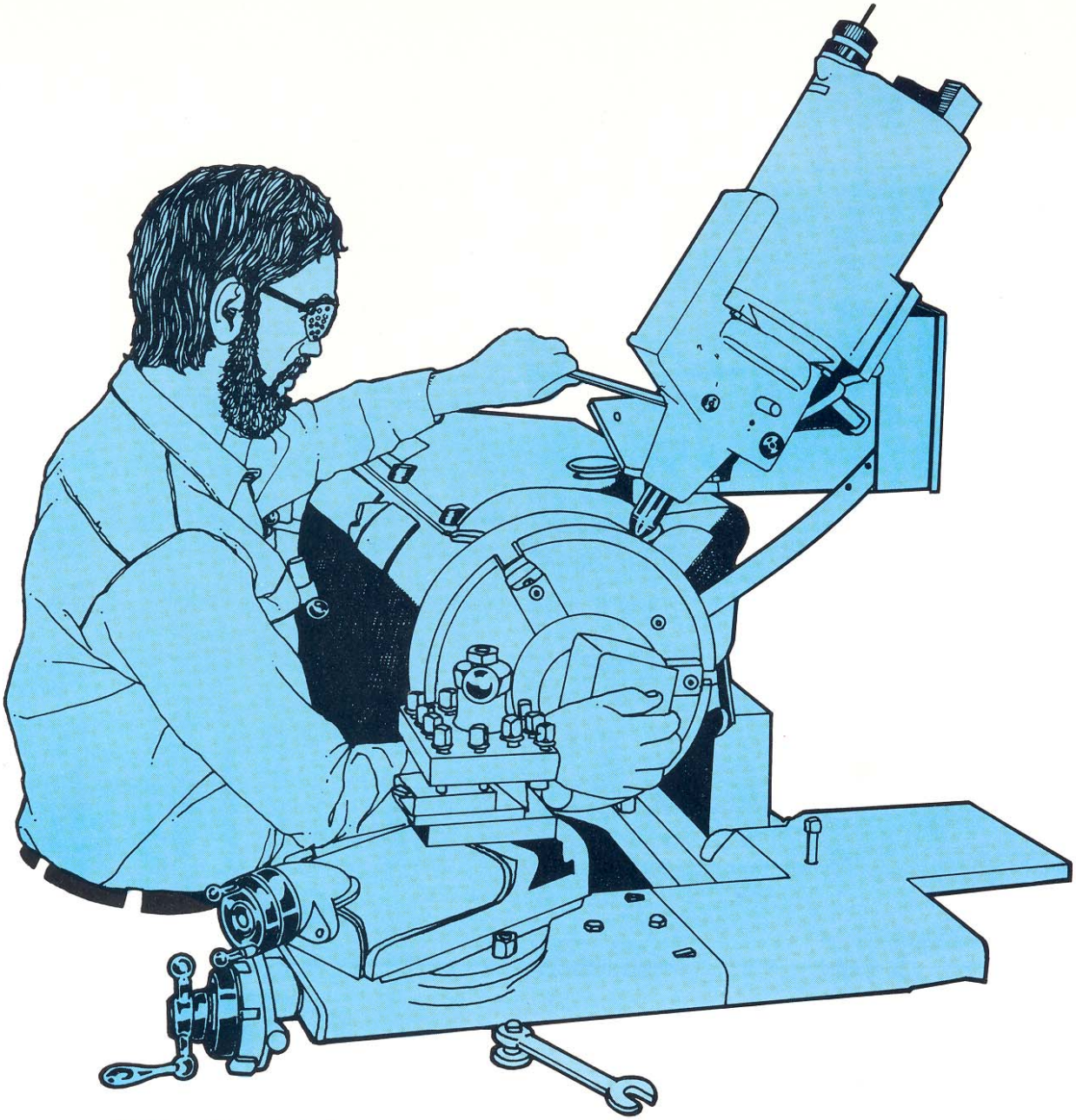

MODEL 4M-1-1/2, in line power wrench. Torque is adjustable from 500 to 4000 inch pounds at 60 R.P.M. on the output shaft for chucks up to 24" diameter. Hand lever moves spindle in and out and actuates forward, stop, or reverse motion. Mechanical interlock safety shaft included.

FEN power wrenches are electrically or hydraulically powered with variable torque output capability. These versatile devices are uniquely suited for rotational tightening, stop and release applications. In line, offset, or right angle models are available having torque output ranges from 25 to 12,000 inch pounds for small clamping jobs up to large "oil country" chuck applications.

Power tightening or opening of scroll chucks, activated by a hand lever, or electrically interlocked, is a typical application on turret and engine lathes. To achieve employee time and energy savings on mid-size machines, our 4M electric wrenches are used. Their torque range of 500 to 4,000 inch pounds satisfies most requirements on chucks up to 24 inches.

last as long as the lathe

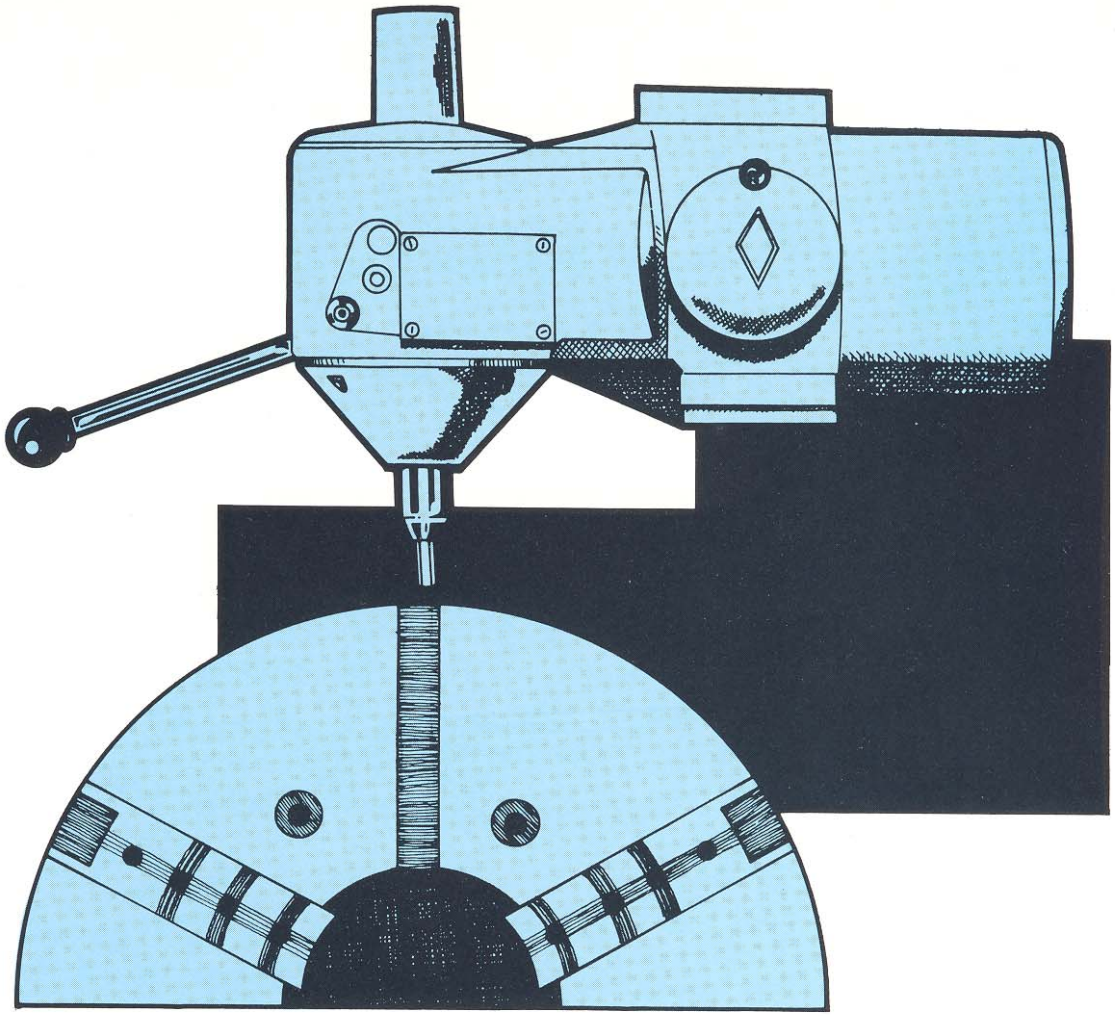

Versatile

- Works with any manual chuck
- Allows minimal investment
- Eliminates costly power chucks

Durable

- Cast metal frame
- Heat treated parts

Easy Operation

- Increases production time significantly

Assures Consistent Pressure on Work Piece

Semi-Automatic or Fully Automatic

FEN Power Wrenches Can Interface With Machine Controls

FEN POWER WRENCHES

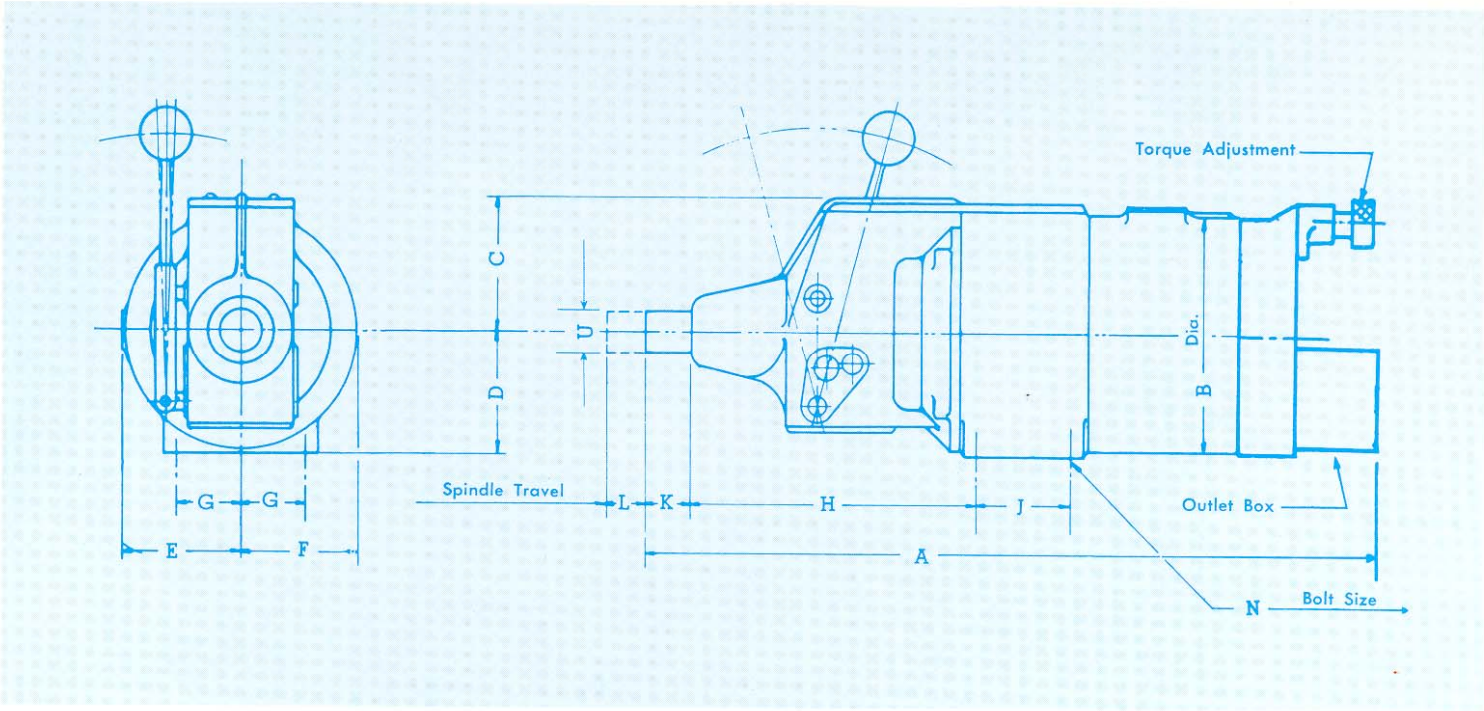

MODEL	A	B	C	D	E	F	G	H	J	K	L	N	U
1M	20	5½	3¼	2⅞	3¾	2¾	1⅝	7⅝	2½	2⅜	1¼	⅜-16	1
4M	24 1/16	7½	4⅜	3⅞	3⅞	3¾	2	8⅞	2¾	2 5/16	1¼	½-13	1¼
6M	27 13/16	9	5⅛	4⅝	4⅝	4½	2½	11⅛	3¾	1 13/16	1½	½-13	1½

Also available with automatic spindle travel, using air or hydraulic cylinders, with push button station or electrical interlock to machine controls.

Model	R.P.M.	Torque Range in Inch Pounds Min.	Max.	Typical Chuck Diameters in Inches
1M	60	100	600	Up to 8″
4M	60	500	4000	Up to 24″
6M	60	1000	7000	Up to 32″

Motors: 220/440 volts, 3 phase, 60 cycles

Optional Pushbutton Station Available

slash production time

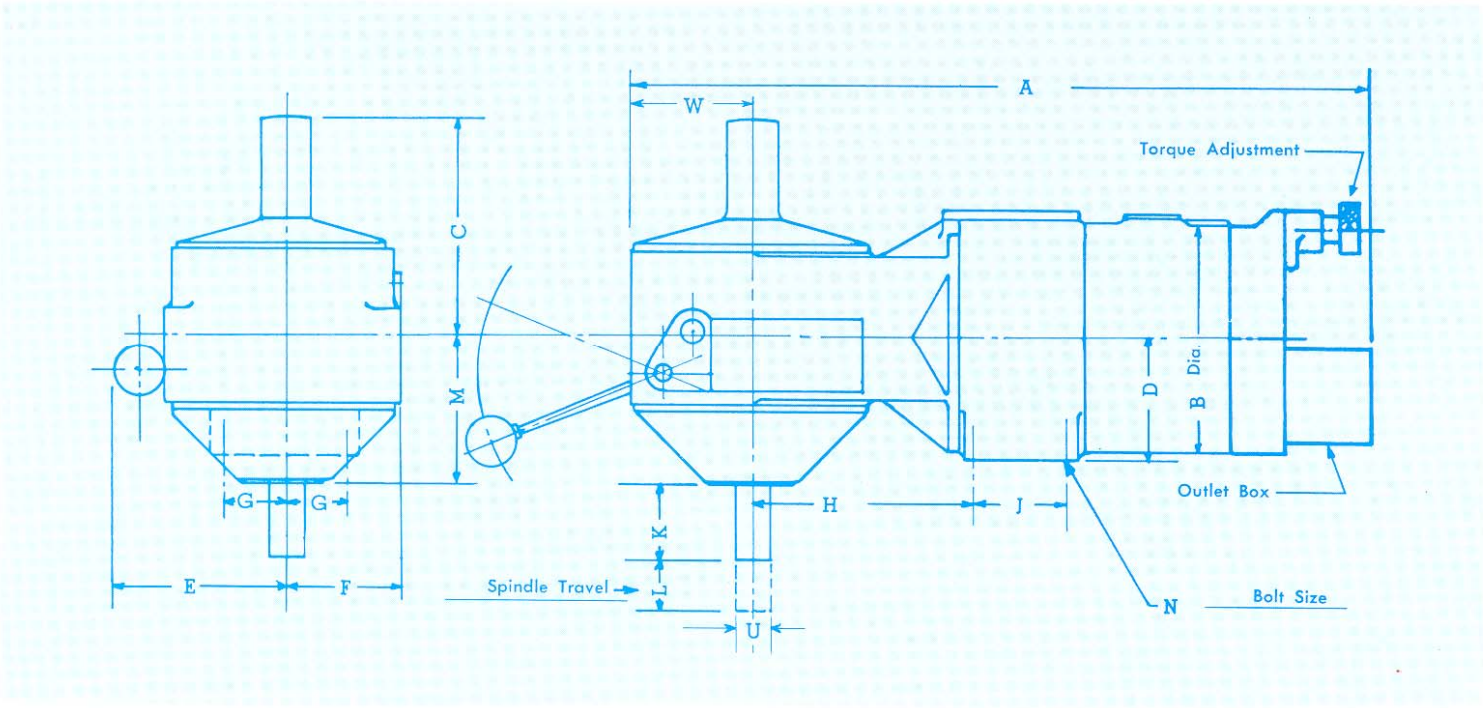

MODEL	A	B	C	D	E	F	G	H	J	K	L	M	N	U	W
2M	17½	5½	6¼	2⅞	4⅜	2⅞	1⅝	4¾	2½	2¼	2½	5	⅜-16	1⅛	2¾
8M	22⅞	7½	8⅞	3⅞	6	4	2	6⅜	2¾	2⅛	3	7¼	½-13	1⅜	3¾
12M	26⅝	9	8	4⅝	6¼	4⅛	2½	7⅞	3¾	3	2	6½	½-13	1¾	3⅞

Also available with automatic spindle travel, using air or hydraulic cylinders, with push button station or electrical interlock to machine controls.

Model	R.P.M.	Torque Range in Inch Pounds Min.	Max.	Typical Chuck Diameters in Inches
2M	30	200	1200	Up to 12″
2M	60	100	600	Up to 8″
8M	30	1000	7000	Up to 32″
8M	60	500	4000	Up to 24″
12M	30	1200	12000	Up to 48″

Specify both model and R.P.M. desired when ordering

FEN POWER WRENCHES

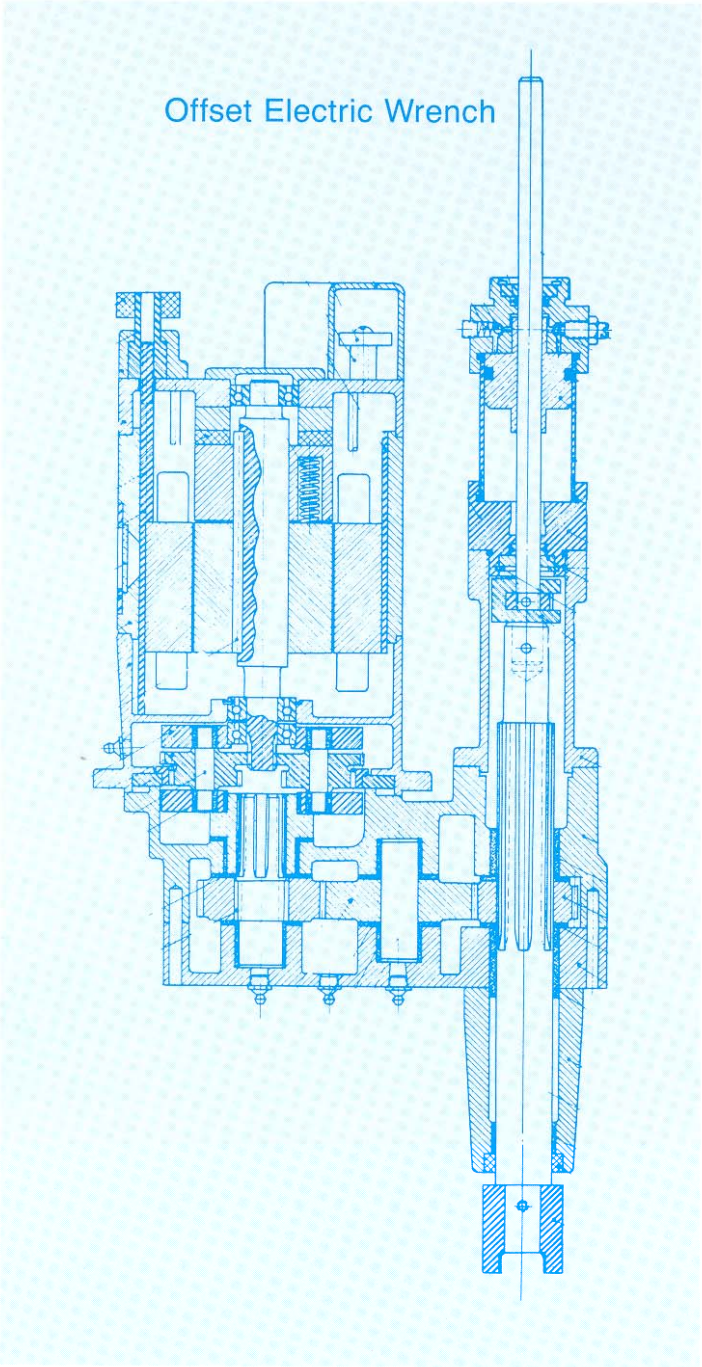

Maximum and Minimum Torque in Inch Pounds for Listed RPM of Output Shaft

Wrench Size		Output RPM 30	60	120	250
1MA	Max.		600	300	150
	Min.		100	50	25
2MA	Max.	1200	600	300	150
	Min.	200	100	50	25
4MA	Max.		4000	2000	1000
	Min.		500	200	200
6MA	Max.		7000	3500	1750
	Min.		1000	500	250
8MA	Max.	7000	3500	1750	850
	Min.	1000	500	250	200
12MA	Max.	12,000	6000	3000	
	Min.	1200	600	300	

Motors: 220/440 volts, 3 phase, 60 cycles

Measurements on dynamic test basis
Standard accuracy ±5% precise tolerance available
Call FEN Manufacturing for torque recommendations

Frequent Applications:

- Lathes
- Thread Millers
- Pipe Threading Machines
- Bolt Runners
- Nut Runners
- Boring Mills
- Screw Machines
- Grinders
- Drivers for Sub Assemblies

FEN power wrenches are electrically or hydraulically powered with variable torque output capability. These versatile devices are uniquely suited for rotational tightening, stop and release applications. In line, offset, or right angle models are available having torque output ranges from 25 to 12,000 inch pounds for small clamping jobs up to large "oil country" chuck applications.

for automatic machinery

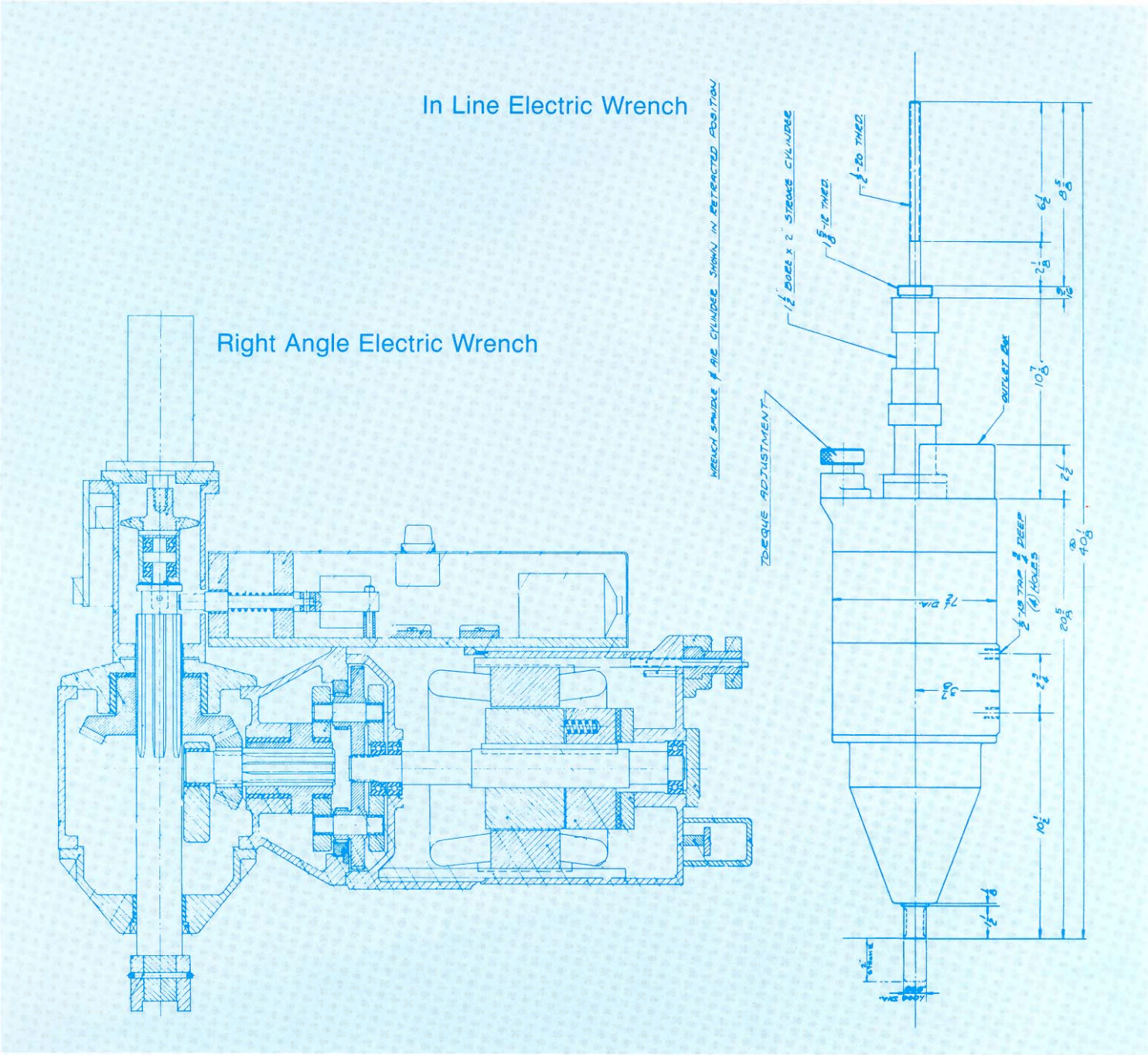

Torque Power for the 1980's and Beyond

- Total Machine and Control Interface
- Torques and Speeds to Match Every Requirement
- Working Strokes From 0 to 12 Inches
- Special Designs as Required
- Driver Design as Required
- Positive Action Brake

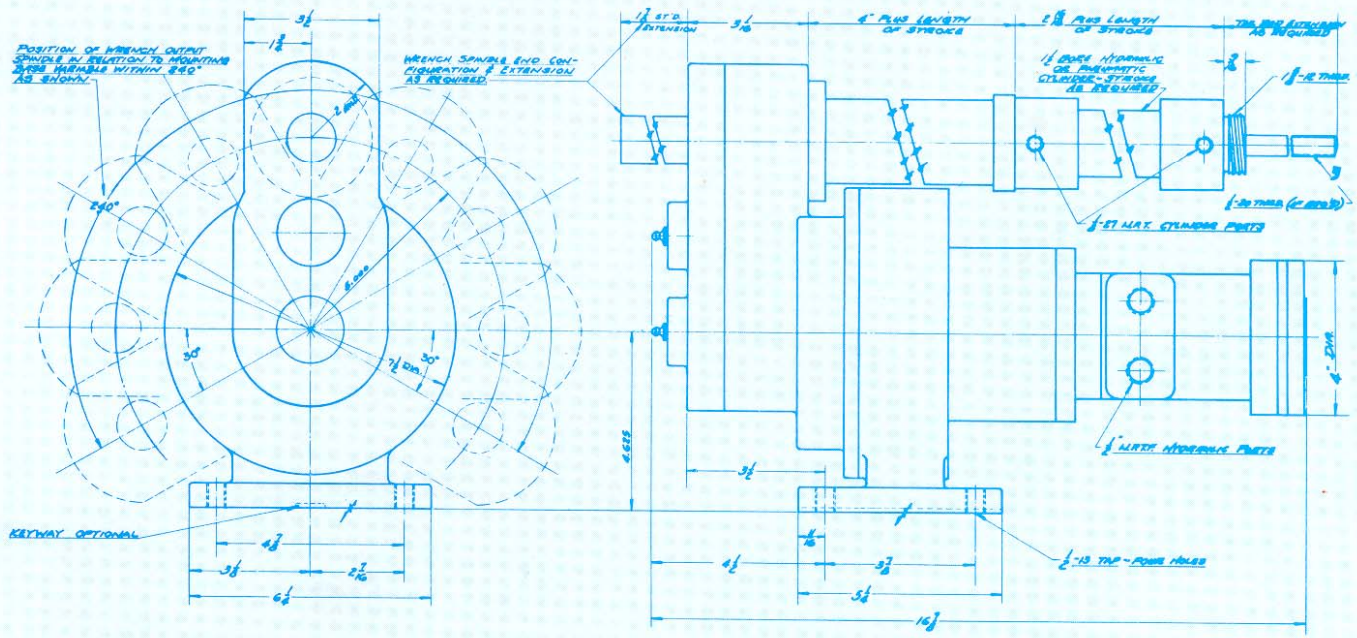

FEN Hydraulic Powered Wrenches for Total Torque and Speed Control

Hydraulic Models Available for Torque Outputs from 50 Inch Pounds to 1000 Foot Pounds of Torque With a Wide Range of Speeds.

This catalog contains information on FEN electric and hydraulic variable torque power wrenches. Please consult factory for specific quotes and recommendations.

FEN POWER WRENCHES

KIRALY TOOL AND DIE, INC.
1250 CRESCENT STREET
YOUNGSTOWN, OH 44502

PH: 330-744-5773
FAX 330-744-5753

WWW.KIRALYTOOL.COM
Email: eng@kiralytool.com